LAU School of Engineering	Course:	Statics – CIE 200 *Exam 3 (75 minutes)*
	Spring 2016 (21 April 2016)	
	Instructors:	Ahmad Mechaymech Amer El-Souri
	Name:	Amer Elsouri
	ID:	Solution.

Problem I: *(25 points)*

For the truss in Figure **I**, determine the **INTERNAL** forces in the following members and state whether they are in tension or compression:

i. ***BC, FC& EF*** using method of sections.
ii. ***AB*** and ***AF*** using method of joints.

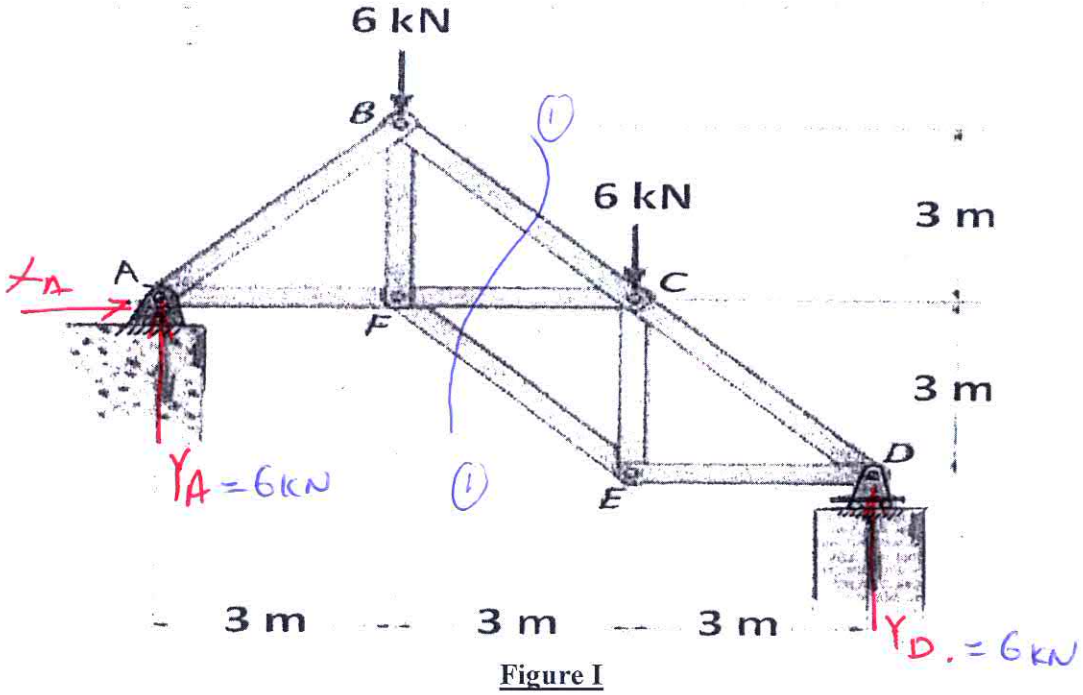

Figure I

Reactions: $\circlearrowleft + \Sigma M_D = 0$

$-Y_A(9) + 6(6) + 6(3) = 0 \rightarrow Y_A = 6_{kN}$

$+\uparrow \Sigma F_y = 0 \quad Y_A + Y_D - 6 - 6 = 0 \rightarrow Y_D = 6_{kN}$

Split left part of section ① ①

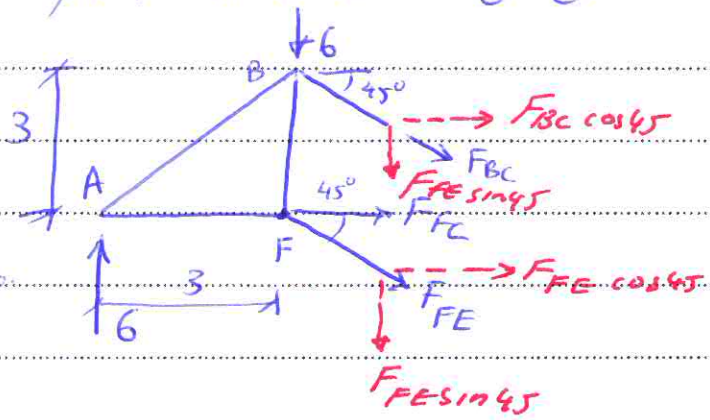

F.B.D

$\circlearrowleft^{+} \Sigma M_{@F} = 0$

$-6(3) - F_{BC}\cos45(3) = 0$

$F_{BC} = -8.5_{kN}$ (C)

$+\uparrow \Sigma F_y = 0$: $\cancel{6} - \cancel{6} - (-8.5\sin45) - F_{FE}\sin45 = 0$

$F_{FE} = +8.5_{kN}$ (T)

$\xrightarrow{+} \Sigma F_x = 0$ $\quad -8.5\cos45 + F_{FC} + 8.5\cos45 = 0$

$F_{FC} = 0$

(ii) Joint "A"

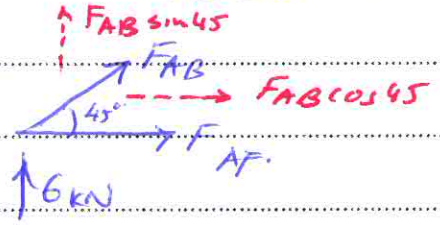

$\xrightarrow{+} \Sigma F_x = 0$:

$F_{AF} + F_{AB}\cos45 = 0$ — ①

$+\uparrow \Sigma F_y = 0$ $\quad 6 + F_{AB}\sin45 = 0 \rightarrow F_{AB} = \frac{-6}{\sin45} = -8.5_{kN}$ (C)

Substitute in ① ∴ $F_{AF} = 6_{kN}$ (T)

CIE 200

problem (II)

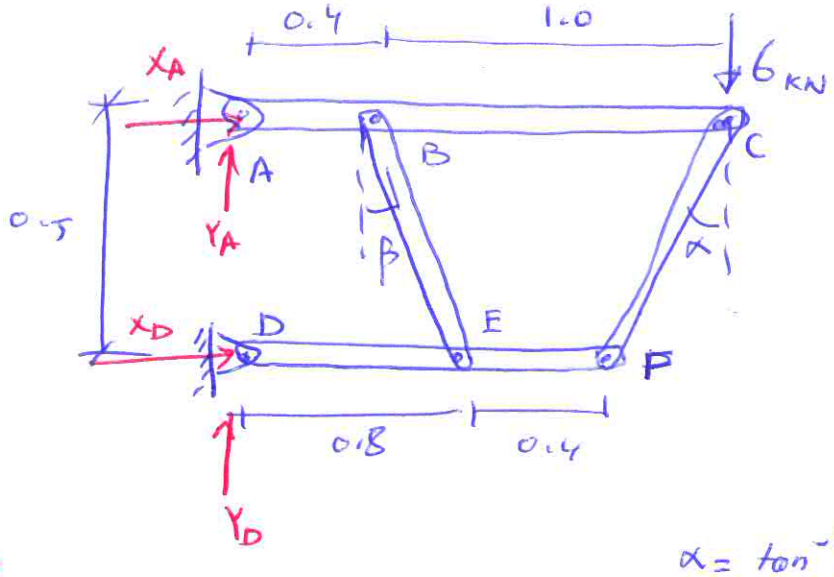

For the F.B.D of whole body:

$\alpha = \tan^{-1}\frac{0.2}{0.5} = 21.8°$

$\beta = \tan^{-1}\frac{0.4}{0.5} = 38.6$

$\circlearrowleft + \quad \Sigma M_{@D} = 0$

$$-X_A(0.5) - 6(1.4) = 0$$

$$X_A = \frac{-6(1.4)}{0.5} = -16.8 \text{ KN}$$

$\xrightarrow{+} \Sigma F_x = 0 \qquad (-16.8) + X_D = 0$

$$X_D = 16.8 \text{ KN},$$

F.B.D of ABC

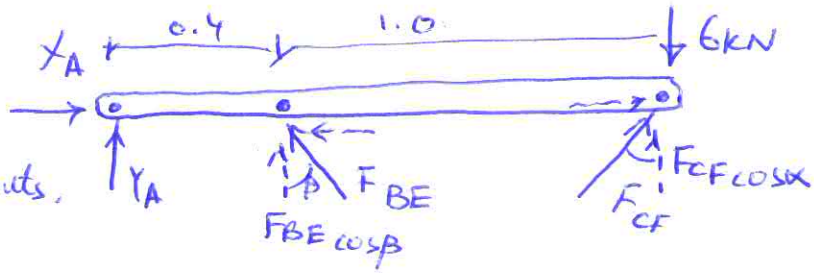

BE & CF are two-Force elements.

$\circlearrowleft + \quad \Sigma M_{@A} = 0$

$$F_{BE}\cos\beta\,(0.4) + F_{CF}\cos\alpha\,(1.4) - 6(1.4) = 0$$

$$0.312\,F_{BE} + 1.3\,F_{CF} = 8.4 \quad \text{—(1)}$$

F.B.D of DEF

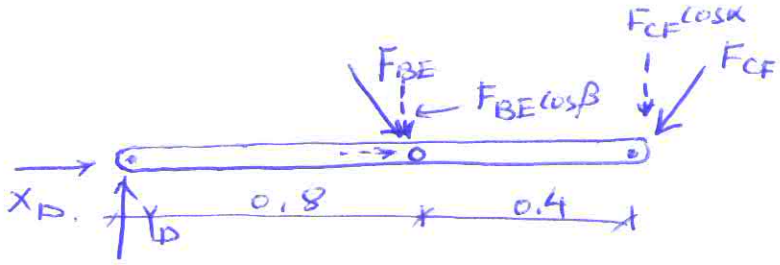

$\circlearrowleft + \Sigma M_D = 0$

$$-F_{BE}\cos\beta(0.8) - F_{CF}\cos\alpha(1.2) = 0$$

$$F_{BE} = -F_{CF}\frac{\cos\alpha \times 1.2}{\cos\beta \times 0.8} = -1.78\,F_{CF} \quad -(2)$$

substitute in eq-(1)

$$-0.312(1.78)F_{CF} + 1.3F_{CF} = 8.4$$

$$F_{CF} = 11.29\,\text{kN (comp)}$$

$$\& \; F_{BE} = 20\,\text{kN (Tension)}.$$

$+\uparrow \; \Sigma F_y = 0$

$$Y_D - 11.29\cos\alpha + 1.78\,F_{CF}\times\cos\beta = 0$$

$$Y_D = 11.29\cos\alpha - 1.78(11.29)\cos\beta$$

$$= 10.48 - 15.7 = -5.21\,\text{kN}$$

Back to Main F.B.D

$+\uparrow \; \Sigma F_y = 0$

$$Y_A + Y_D - 6 = 0$$

$$Y_A - 5.21 - 6 = 0$$

$$Y_A = 11.21\,\text{kN}.$$

Problem II *(25 points)*:

For the **FRAME** shown in Figure **II**, supports are a hinge at ***A*** and a hinge at ***D***. Determine the reactions at ***A*** and ***D***. Hint: Members ***BE*** and ***CF*** are two-force members and Force unit is kN.

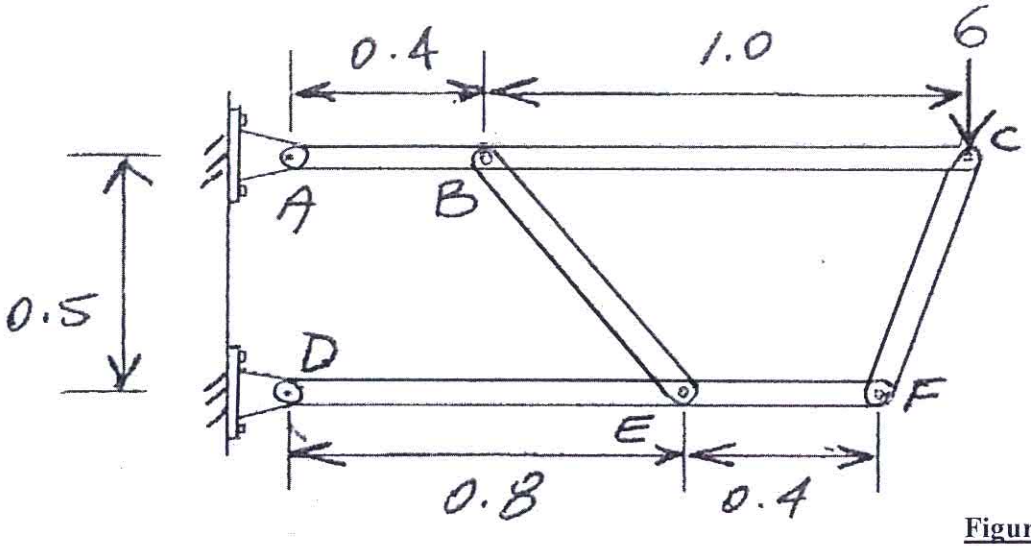

Figure II

Problem III *(25 points)*:

For the beam shown in Figure **III**:

1- Compute the reactions at supports A and C (advice: double/triple-check them!). *(7 points)*

2- Compute the shears and moments at points ***D*** and ***B***. *(18 points)*

Note: The 50kNm is applied at B. D is at mid point of AB.

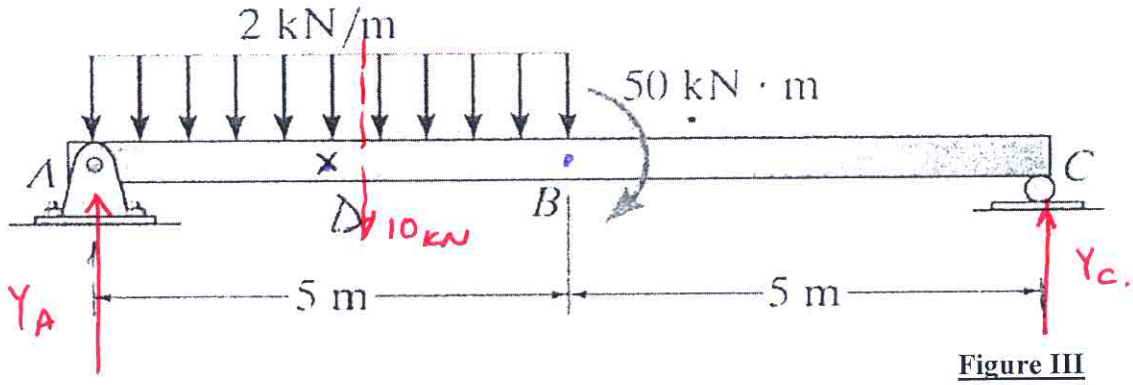

Figure III

① Reactions

$\circlearrowleft + \Sigma M \omega C = 0$

$-Y_A(10) + 10(7.5) - 50 = 0$

$Y_A = 2.5$ KN.

$+\uparrow \Sigma F_y = 0 \quad Y_A + Y_C - 10 = 0$

$Y_C = 7.5$ KN

② at "D"

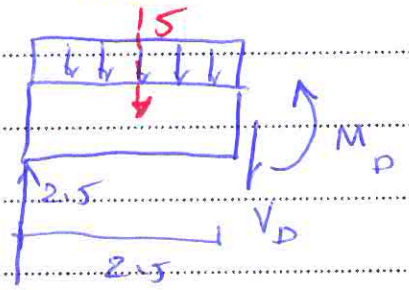

$+\uparrow \Sigma F_y = 0$

$2.5 - V_D - 5 = 0$

$V_D = -2.5$ KN.

$\circlearrowleft + \Sigma M \omega D = 0$

$-2.5(2.5) + 5(1.25) + M_D = 0$

$M_D = 0$

At "B"

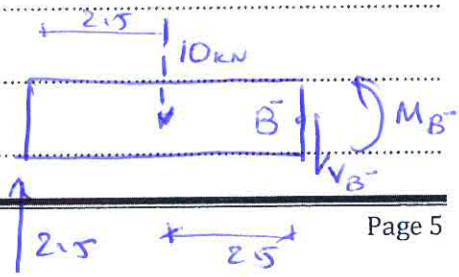

$+\uparrow \Sigma F_y = 0 \quad 2.5 - 10 - V_{B^-} = 0$

$V_{B^-} = -7.5$ KN.

$\circlearrowleft + \Sigma M \text{ @ } B^- = 0$

$-2.5(5) + 10(2.5) + M_{B^-} = 0$

$M_{B^-} = -25 + 12.5 = -12.5 \text{ kNm}$

For B^+

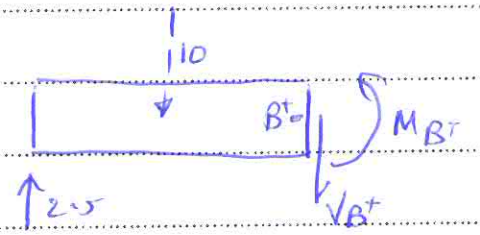

$V_{B^+} = V_{B^-} = -7.5 \text{ kN}$

$\circlearrowleft + \Sigma M \text{ @ } B^+ = 0$

$-2.5(5) + 10(2.5) - 50 + M_{B^+} = 0$

$M_{B^+} = 37.5 \text{ kNm}$ ✓

Problem IV: *(25 points)*

For the beam shown in Figure **IV**:

1- Compute the reactions at supports A and C. *(5 points)*

2-
- Write the equations for shear and bending moments for the parts of beam between A and B, B and C. *(10 points)*
- Draw the shear force and bending moment diagrams for the whole beam. Show the important and necessary features and values on the diagrams and indicate the maximum positive and negative shears and moments in the beam. *(10 points)*

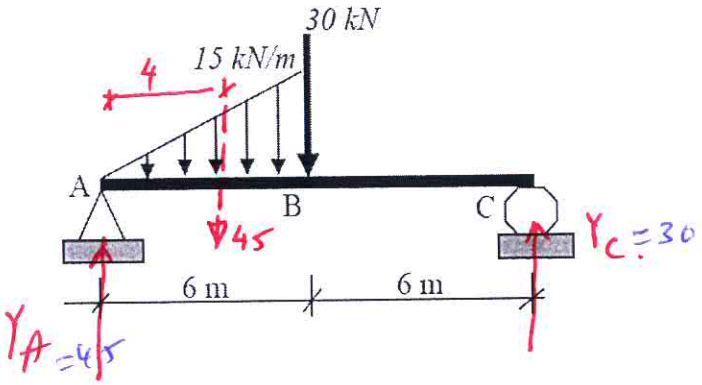

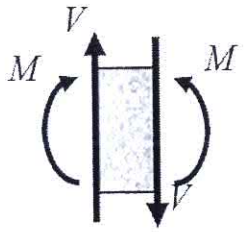

(+) Convention

Figure IV

Reactions: $\circlearrowleft + \sum M_A = 0$

$Y_C(12) - 30(6) - 45(4) = 0$

$Y_C = 30\,kN$

$+\uparrow \sum F_y = 0 \quad -45 - 30 + Y_A + Y_C = 0$

$Y_A = 45\,kN$

(1) Part AB assuming origin at "A"

$0 \le x \le 6$

$+\uparrow \sum F_y = 0 \quad 45 - 1.25x^2 - V = 0.$

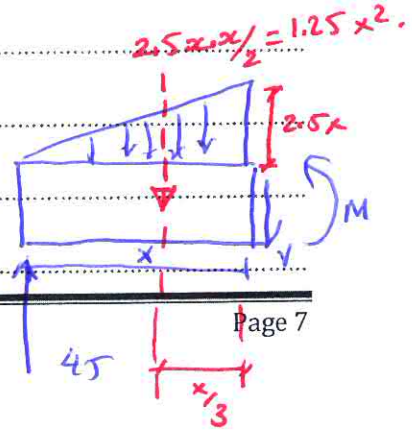

$V = -1.25x^2 + 45$ $\begin{cases} x=0 & V=45 \\ x=6 & V=0 \end{cases}$

$V' = -2.5x$ $\begin{cases} x=0 & V'=0 \\ x=6 & V'=-15 \end{cases}$

$\circlearrowleft + \ \Sigma M \ @ \ x=0$

$-45 \cdot x + 1.25x^2 \cdot \frac{x}{3} + M = 0$

$M = -0.416x^3 + 45x$ $\begin{cases} x=0 & M=0 \\ x=6 & M = 180 \text{ kN-m} \end{cases}$

$M' = -1.25x^2 + 45$ $\begin{cases} x=0 & M'=45 \\ x=6 & M'=0 \end{cases}$

$M'' = -2.5x \rightarrow$ -ve always $\frown$

For Part "BC" Start from Right Support "C"

i.e C is origin

$0 \leq x \leq 6$

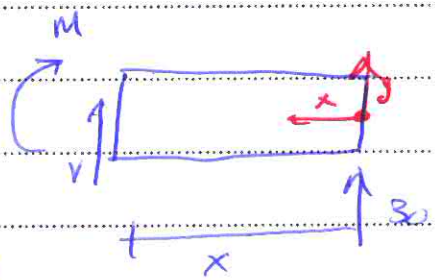

$+\uparrow \Sigma F_y = 0$

$V + 30 = 0$

$V = -30$ (constant)

$\circlearrowleft + \ \Sigma M \ @ \ ② = 0$

$30 \cdot x - M = 0$

$M = 30x$ $\begin{cases} x=0 & M=0 \\ x=6 & M=180 \end{cases}$ ✓ verified

$M' = 30$

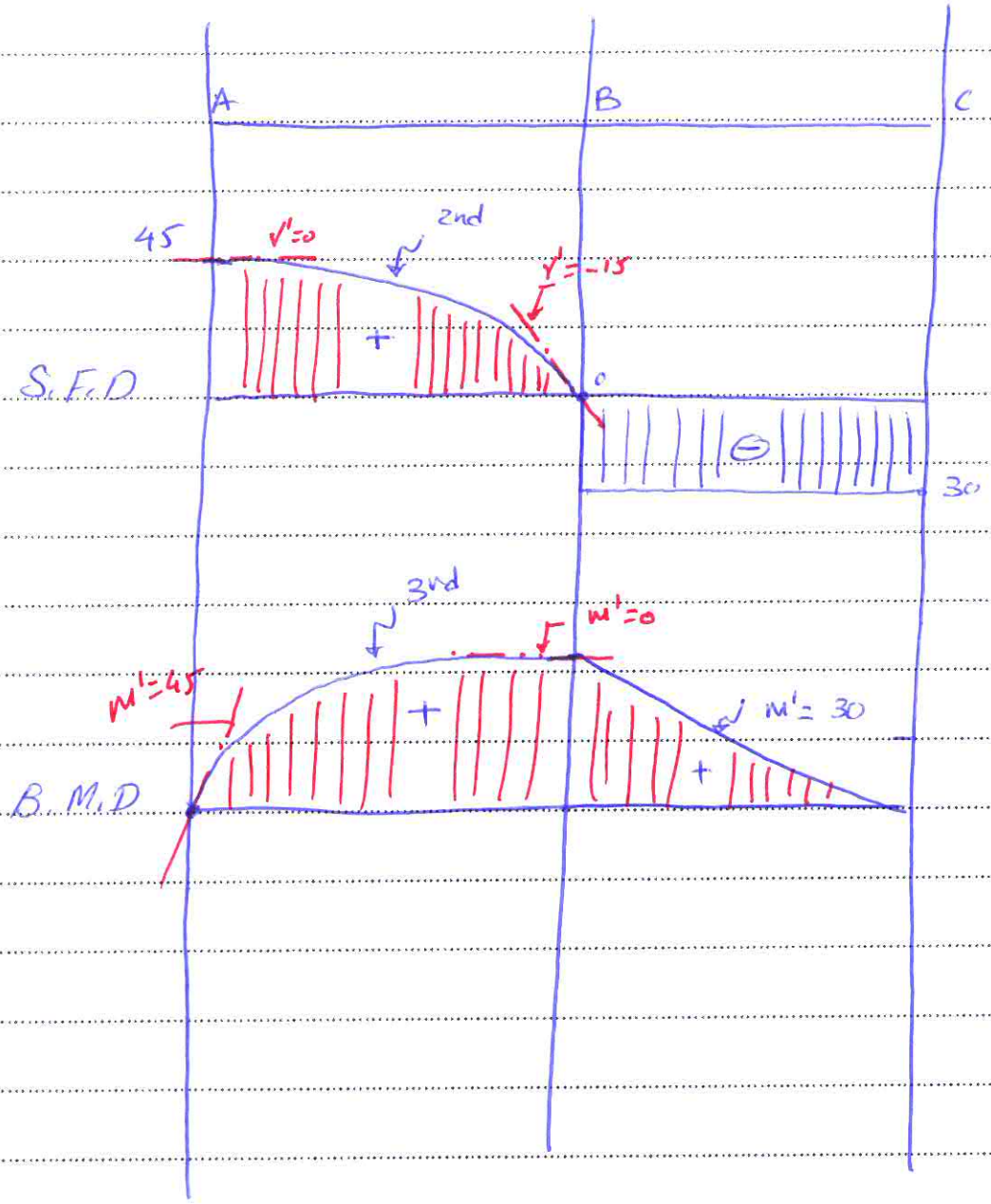
A
B
C
45
V'=0
2nd
V'=-15
+
S.F.D
0
⊖
30
3rd
M'=0
M'=45
+
M'= 30
+
B.M.D